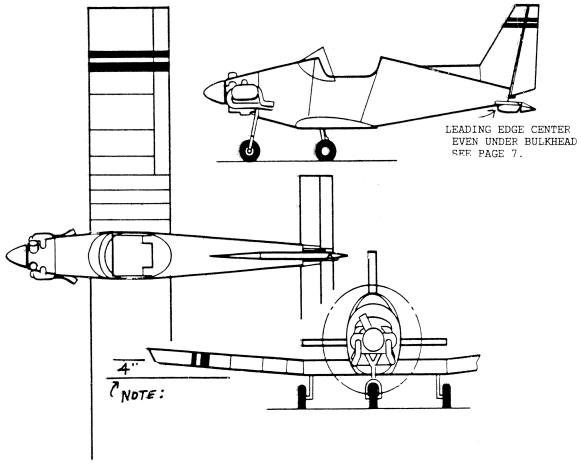

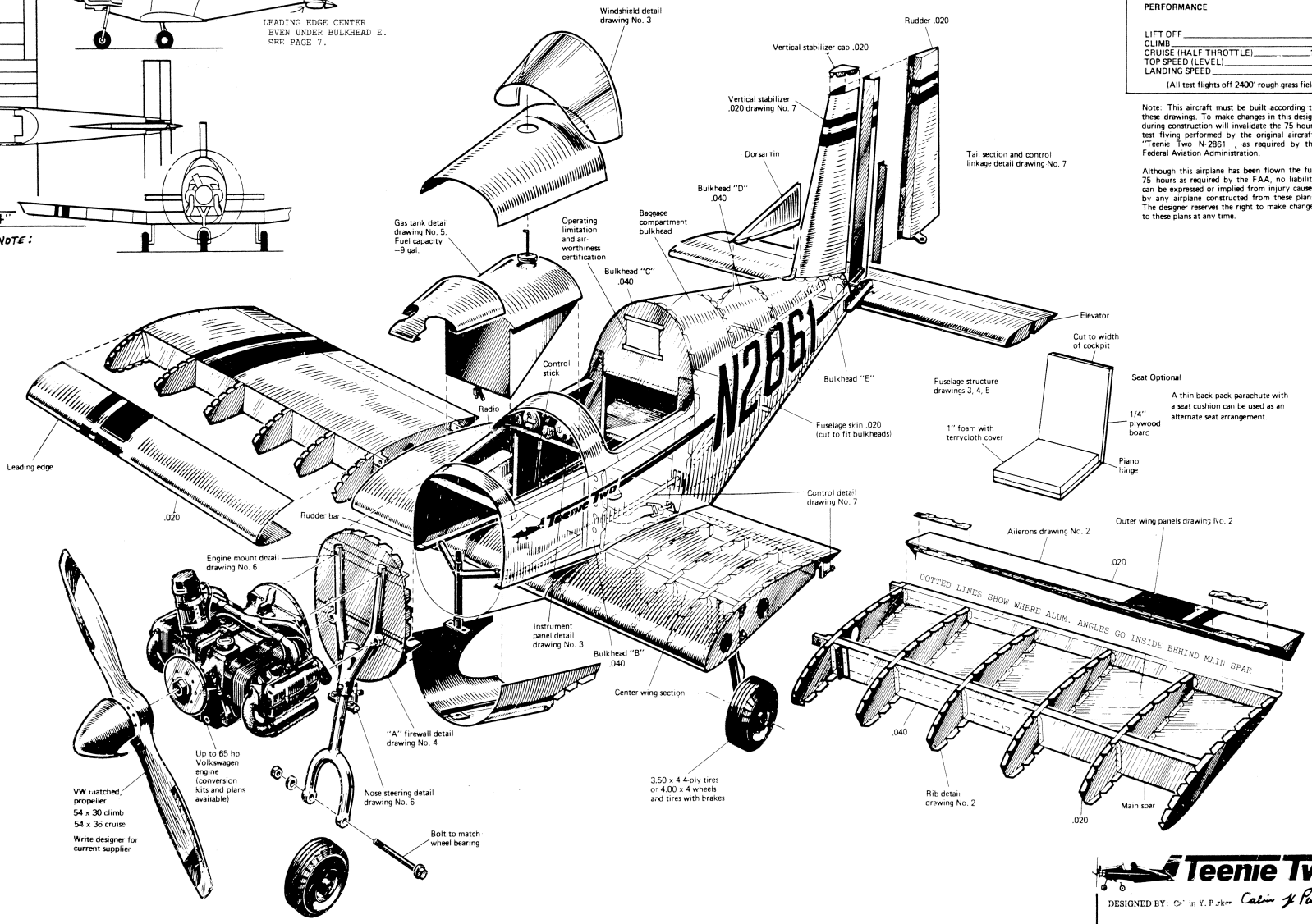

SPECIFICATIONS

EMPTY WEIGHT	310 lbs.
FUEL CAPACITY	9 gal.
WING SPAN	18 Feet
LENGTH	12 Feet 10 Inches
GROSS WEIGHT	590 lbs.
TRICYCLE GEAR	350 x 4 Tires and Wheels

PERFORMANCE

LIFT OFF	50 mph
CLIMB	800 fpm
CRUISE (HALF THROTTLE)	100 mph true
TOP SPEED (LEVEL)	120 mph
LANDING SPEED	50 mph

(All test flights off 2400' rough grass field)

Note: This aircraft must be built according to these drawings. To make changes in this design during construction will invalidate the 75 hours test flying performed by the original aircraft, "Teenie Two N-2861", as required by the Federal Aviation Administration.

Although this airplane has been flown the full 75 hours as required by the FAA, no liability can be expressed or implied from injury caused by any airplane constructed from these plans. The designer reserves the right to make changes to these plans at any time.

Teenie Two

DESIGNED BY: Calvin Y. Parker

DRAWN BY J.S.	COPYRIGHT 1968 Calvin Y. Parker	REV. 8-71 11-16-73
DATE JAN. 71		NASAD 3-16-74
SERIAL NUMBER. 07-05-2000		SHEET 1 OF 7